Step Two

Install Windshield Retainer on top of windshield frame. Use retainer pieces as templates to mark, center punch and drill eleven 1/8" holes. Install with eleven #8 x 1/2" Pan Head Screws.

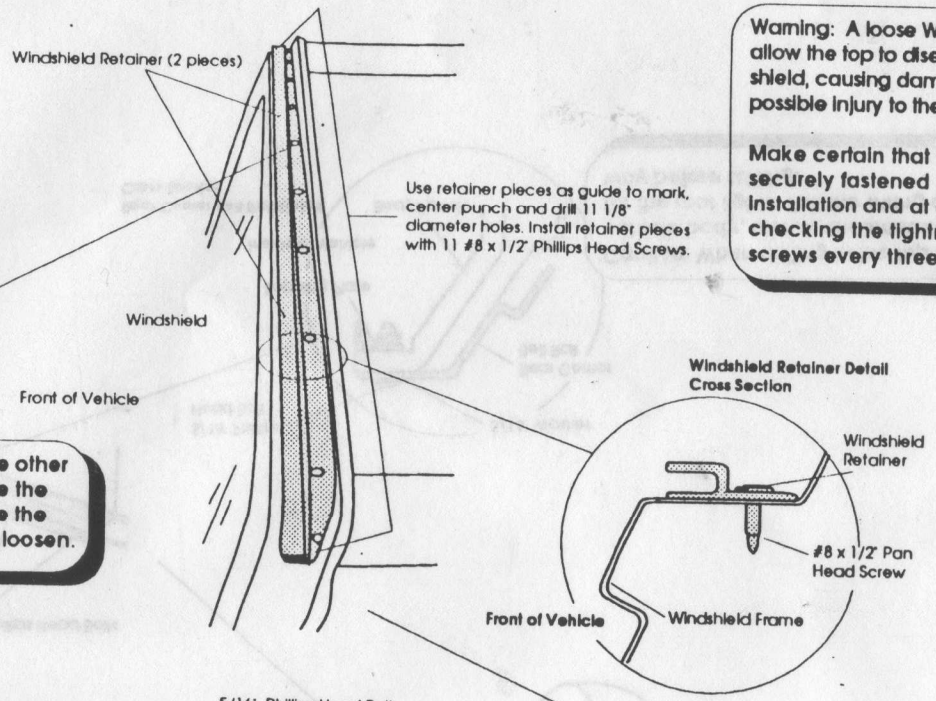

Drill 1 hole between the two retainer pieces.

Do not use any drill size other than 1/8". Failure to use the correct size may cause the Windshield Retainer to loosen.

Warning: A loose Windshield Retainer may allow the top to disengage from the windshield, causing damage to the top and possible injury to the occupants of the vehicle.

Make certain that the Windshield Retainer is securely fastened to the windshield during installation and at all other times by checking the tightness of the mounting screws every three months.

Step Three

Install the Left and Right Side Belt Rails on each side of the vehicle. Use the Belt Rails as templates to mark, center punch and drill six 3/8" holes along the top edge of the body on each side of the vehicle. Some vehicles may already have four of these holes. Secure the two **rear** holes in the rails with two 5/16" Phillips Head Bolts, two 5/16" Washers and two 5/16" Tapping Plates. **Do not tighten the bolts yet.**

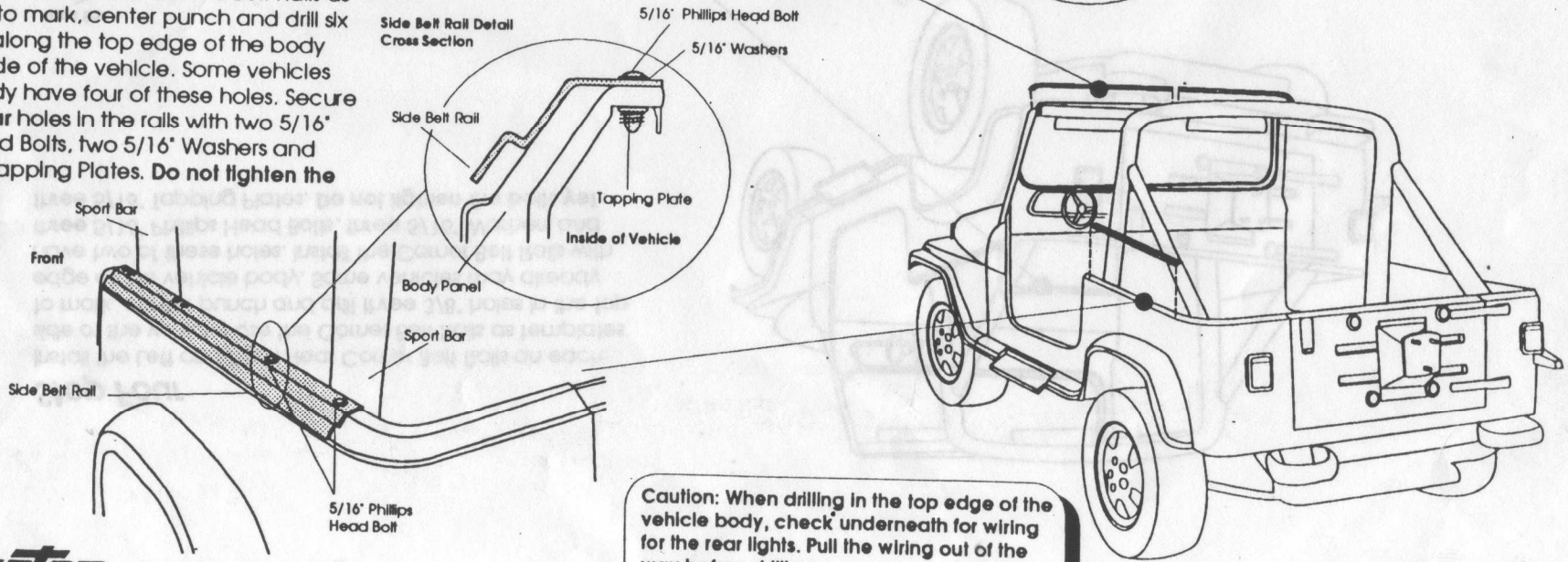

Caution: When drilling in the top edge of the vehicle body, check underneath for wiring for the rear lights. Pull the wiring out of the way before drilling.